How to Trim the Micro Magic

Approximately 18 months prior to publication of this issue of Model Yachting, I had a conversation with John Davis concerning proposed articles and the like. John asked me if I thought it would be OK to reprint Thomas Dreyer's tuning article. He said that he always loved this article and felt that it was one of, if not the best of the tuning articles he knew, and that it was useful for all rc sailors in all classes. He said that he'd like to write the introduction. I knew the article well, loved it myself, and happily agreed to reprinting it. Sadly, John is no longer with us to write the introduction.

This article was previously published in both Issues 155 and 162. Thomas Dreyer is the designer of the Micro Magic and was the 2007 European Champion. The article was translated from German to English by Klaus Huber, then copyedited for American English usage by Pat Butterworth.

by Thomas Dreyer
All photos by Thomas Dreyer

I would like to share some hints with you in order to help you trim the rig and sails of a Micro Magic (MM).

First I want to make clear that all the finer points and details often are felt very little when the boat is on the water. Especially with a boat as small as the Micro Magic, all effects are rather small and are more likely than not to be overridden by weightier "faults" such as the helmsman. You probably won't notice any difference if you sail your boat just by yourself, as you can't compare the results of your changes.

In other words, only in direct comparison with other boats on the same course will you see the results of changes such as difference in speed or handling.

Basically there are two settings that are related:

Basic trim

The relationship between area underwater (hull, rudder, and fin) and area above the water (sail area) are balanced so that the boat keeps sailing a straight course.

The boat should neither permanently try to turn into the wind (weather helm), nor independently fall off (lee helm).

To achieve that balance, the center of effort of the sails (simplified—projected sail area of mainsail plus jib) is moved forwards or backwards relative to the center of lateral resistance (simplified—projected area of underwater hull, rudder, fin, and bulb).

Trim of the sails

This is setting of the "engine" of our boat for optimum propelling force and involves the profile of the sails, the profile of the mast, and tension of the rig.

The balanced position of main and jib belongs to both categories.

The basic trim

As a basic rule, the center of effort should be just a little forward of the center of lateral resistance. The exact position is the key to speed and handling. However, preferences vary among sailors.

When using the MM kit without modification, the MM already is preset as the mast is stepped into a fixed, slightly oval pocket. This setup provides increased stability; shrouds could even be omitted. Up on deck the mast is fixed using a plate. This plate helps to control the angle of the complete rig.

It may not be obvious, but this sliding plate is of great significance, as it enables you to fine trim and adjust to changed weather, as it controls the curve of the mast and so the camber of the mainsail.

The ideal (but boring) boat just carries on under all wind conditions and gusts without need of rudder and accelerates in every gust.

High performance boats behave ideally only in a limited range of wind speed. In order to achieve high boat speed, all areas under the waterline are reduced to a minimum of surface area. Shallow underwater hull, narrow fin, and freestanding (spade) rudder—just like an MM. The price you pay is less stability, of course, so these boats require active sailing and steering.

In fact the MM requires constant activity on the rudder in order to a steer the boat on a straight course; specially, gusty conditions require constant attention.

Because of her layout the MM has little direction stability, and combined with low weight and small size she responds to wind changes much faster than do larger boats. (It's about the moment of inertia, etc.)

In general, a slight weather helm is considered desirable, as the boat accelerates pretty well and will turn into the wind (if it becomes too great) instead of heeling sideways onto the water. Sailboats trimmed slightly to weather helm are better performing, it is said. Slightly trimmed to the weather helm means the boat keeps its course independently in light and steady wind abeam. Once the wind weakens the boat stays on course; if the wind increases it starts turning the bow into the wind. Depending on the strength of the wind, it may happen more slowly or quickly. The consequence is that a boat in gusty wind will always require rudder correction to stay on a straight course, which is bad, as all rudder movement will slow a boat down not only in theory but in practice.

Here a hint: It doesn't make sense to apply helm only, as it brakes; you need to open up the sails a little bit—*a little bit*. So in a gust you apply helm and give a bit of slack on the sails. After a gust you haul tight again—immediately.

Please use feeling and not a "digital" open and close only. Yes, it takes practice and training until you become familiar with how much rudder and how much slack on the sails is needed to stay on course and not lose your speed, but it is worthwhile to practice and learn.

Trimmed to a slightly constant lee helm—as opposite to above—will make your boat permanently turn away from the weather helm on a course with wind abeam, again in steady, light wind conditions. But in gusts with additional energy, it will sail straight and transform any boost into additional speed without correction of course.

Unfortunately, you always have to pay attention so that you get close-hauled right to "the edge of wind" (slang for optimum close-hauled while tacking windward); the boat does not find its best way automatically and won't indicate changes of direction of the wind. It may happen

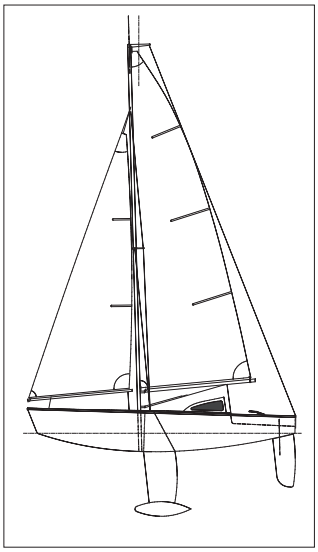

Figure 1. Mast tilted forwards—tendency toward lee helm, will resist acceleration, but not so fidgety, suitable for a lot of wind, and gusty wind.

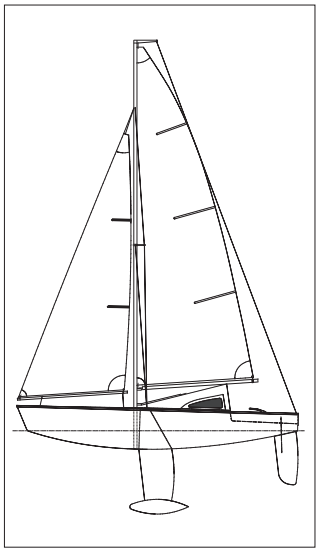

Figure 2. Mast straight (perpendicular to the waterline)—quite balanced, slight weather helm—default setup of the kit.

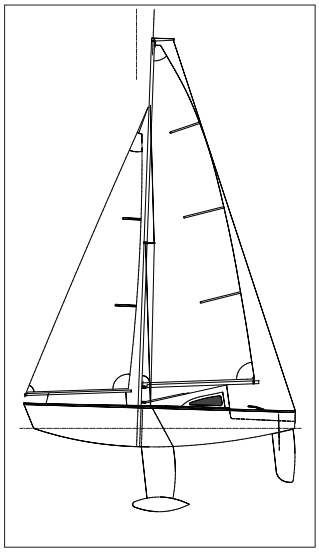

Figure 3. Mast slightly tilt aft—weather helm; use only with very little wind.

that your boat is constantly falling off without you noticing.

You constantly need to test the edge of the wind—until your jib just begins to flutter. Also, a lee helmed boat doesn't accelerate as well after tacking.

The Micro Magic allows a slight tilt of the mast—rig forward or backward—in order to do a basic trim.

There is no solution that always fits for any type of weather. You need to decide which handling characteristics you prefer and best cope with. A boat trimmed for lee helm may appear slower over all, but if the skipper makes fewer mistakes and therefore steers more easily and less nervously, the overall result may be rewarding. In gusty wind a boat trimmed for lee helm sails more balanced, while a boat trimmed for weather helm is more nervous. therefore, there is no recommendation—try it, and find out for yourself.

Position jib and mainsail

A major influence on lee and weather helm is the position of jib and mainsail. The profiles of each sail and the length of their sheets affect their position relative to each other. Both sails together form the center of effort, but not quite so, as the efficiency of each sail itself becomes important (similarly, the center of lateral resistance, as well, depends on hull form and profile of appendices). The efficiency of each sail is different, and therefore both sails need to be set properly.

Simply put, if the jib (foresail) is too close-hauled, then there is more pressure on this sail and the point of maximum pressure moves forward—the boat is becoming lee helmed. The same happens if the mainsail is too open, so the back part of the sail flaps in the wind while the jib is still pulling the boat. The opposite behavior happens (the boat becomes weather helmed) when the mainsail is set too tight and the jib too open.

Figure 4. The slot is too narrow; the jib too close.

Figure 5. The slot is too wide; the jib too open.

Figure 6. The slot OK and even.

Now what is *too close* and what is *too open?*

In principle, with close-hauled sails the jib should be slightly more open (at a greater angle) than the mainsail, where slightly depends much on the profile of the sails.

The main boom should *never* be in an amidships position, but allowed to be sheeted only within about 1 to 2 degrees of amidships (some people recommend around 5 degrees). Well—as long as the mainsail is trimmed properly and not flapping at the leech (downhaul, or vang).

The jib should now be set in a way that its profile at the leech guides the air stream harmoniously to the mainsail, so the flow does not press into the mainsail, and there is no big slot left. Ideally the slot should be set that it results in a slight jet effect, a *slight* narrowing of the slot along the overall leech in a way that it stays constant and does not change when the wind varies in strength.

There is an old rule of thumb that says that if the boat runs close-hauled and is steered very slowly into the wind, first the jib luff should start to flap, shortly before the mainsail loses its pull, where the main should have a slight bulge (only very close-hauled, never on other courses) at the luff that is caused by the jib set slightly too tight.

However, you need to properly set your rig and sails.

The trim of the sails

The MM allows all settings needed to create properly fitting profiles for all sails, as it has a 5/6-rig. (It is called a 5/6-rig because the jib head or fore stay is not going up to the mast top but ends about 1/6 below the rig top.)

Important: A boom lift or topping lift

If it does not already have one, you need to modify any model sailboat and add a topping lift to be able to set up the boat properly.

Please attach a very thin string (e.g. thinnest nylon thread) with an adjustable bowsie at the very end of your jib boom and attach the other end the top of your forestay (or where you attached your jib to the mast). The topping lift is essential to set and control your jib profile. Without it you'll have a flat, tight non-performing foresail without pull.

Some theory first:

The mast in such a rig works like a bidirectional bow: If you pull the backstay (to apply tension to the forestay/jibstay), this force is directed to the mast top. The jib counters this force (otherwise the mast would indeed fall over backward) but is not attached at the top, but a good distance below, and cannot immediately take the complete load. The upper portion of the mast will be bent backward, depending on the stiffness and strength of the material. This bend is

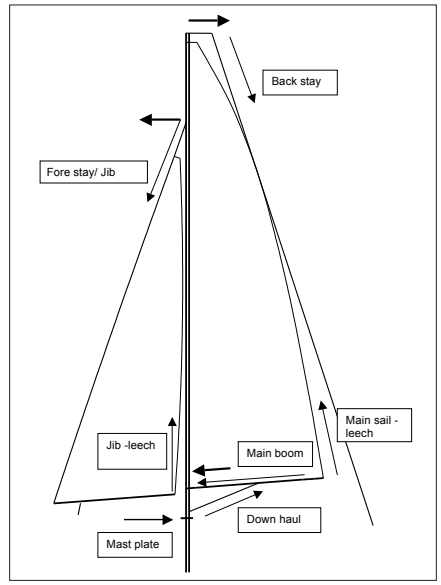

Figure 7. Forces on the Micro Magic rig.

distributed over the full length of the mast, not only the upper part is bent aft but the longer lower part below the attachment of the forestay/jibstay will be bent slightly forward.

The forestay is not freestanding and visible as is the backstay, but usually hidden in the seam of the sail, which forms the luff. It is important that only this integrated forestay is under tension and taut, not the entire luff of the jib! The jib luff is not meant to carry that tension; the jib would be deformed and destroyed! The jib luff should carry only enough pull to avoid wrinkles—not more!

The shrouds are not important when it comes to trim the MM. Forestay and backstay are sufficient. If you decide to use a 6 mm carbon tube as mast, you may want to omit shrouds completely.

That makes a so-called shroudless rig, which allows the mainsail to be released (sheeted) wide open. In addition it is easier to store and pack, and there is less to break.

The main boom with the vang acts as an additional bending force on the lower part of the mast. If the wind pushes into the mainsail, its leech tries to yield to the wind and its force, and wants to open. However, this effect is countermanded by the main boom. This will again bend the mast slightly forward at the bottom. The MM mast has good stiffness through its fixation on the deck using the mast plate. As all lever arms are short, all forces on the mast (in all positions of the main boom, even if it pushes sideways into the mast) are resisted without significant bend of the mast.

Most model sailboats have a so-called pendulum jib, as the MM has. The forces of the headsail that are in the forestay and jib leech are balancing each other over the jib boom. The jib boom is suspended similar to a mobile. The tension from the forestay is transferred to the leech of the jib via the boom. As the boom is fastened to the deck not right at the front but at a point back about 1/5 of its length, a lever is created. The tension of the forestay is transmitted to the leech slightly reduced. This quite effectively pre-

Figure 8. Too much jib-leech tension.

Figure 9. Less tension; curve on the jib leech.

Figure 10. Trim jib leech by using topping lift.

Figure 11. View abaft of Figure 8.

Figure 12. View abaft of Figure 9.

Figure 13. View abaft of Figure 10.

vents the leech from flapping and losing its drive once the jib sheet is released.

Then if the wind blows into the jib, it forces the leech (rear area) to open. The jib boom is pulled upwards at the end; however, this again creates more tension on the forestay, which prevents the jib from twisting and losing the profile and pull. Without tension on the forestay, the jib will flap.

Fundamentally, the forestay should always be set as tight as possible, so that (in a pendulum jib arrangement) the jib doesn't flap or twist uncontrolled.

However, this will tighten the rear area (leech) so much that it no longer will fit harmoniously with the mainsail but become stiff as a board. The remedy is the topping lift acting as a relief. You control the tension on the jib leech as you control the tension on the mainsail, using the downhaul or vang. The topping lift pulls the jib boom slightly up at the rear end, so the leech is allowed to "curve" again. The forces in this setting will stay balanced over a wider wind range; however, the control over the jib is limited by the overall flexibility of the rig.

However, be careful that the setting is not too taut, otherwise there may be too much tension on the sails and suspension on deck or the mast, which prevents free moving of the sails in light wind. The jib may no longer turn easily or develop a preferred side. This is due to possible distortions in the mounting knots/lines, which become obvious only under tension. Sensitiveness is asked for.

To set and control all of these influencing forces to ensure a smooth and clean sailing profile of *both of the sails* is not easy, because the general flexibility of our rig is an additional factor. One setting, set on land, suddenly looks quite different on the water with much more wind. One setting is only best for only a given wind range. As we (usually) are not able to control the tension of the rig via RC, we need to find the best compromise, so when it comes to setting tension and profile of our sails we achieve the best setting for the wind that mainly prevails on our day out.

Tip: It is helpful to lay the boat on the floor during the setup. You can see very well from the top all mast curves and sail profiles. Admittedly, this is without any influencing load (wind), but to work on the basic settings the wind is rather a hindrance anyway. The setting then is checked while picking the boat up and turning it in the wind, adjusting all parameters until you feel satisfied.

Rig Trim

A slight mast curve is needed for the correct trim of your MM and is assumed in the MM setup—but only a slight bend!

Trim attempt No. 1

We take our boat, adjust the mast approximately perpendicular to the water line (fasten the mast plate lightly) and hook on the jib and the backstay.

In the beginning the downhaul (vang) stays free of tension, we'll take care of it later.

Both sails are in position close-hauled.

To get the tension on the forestay we need for sailing, we tighten the backstay first.

Now the backstay is tightened, and the mast is curved like a bow. The forestay (the forestay only and not the luff) is tight as well. The jib is tight as a board, and we release some of the tension on the leech by tightening the topping lift and getting a harmonically curved leech.

Figure 14. Trim attempt No. 1. Is everything OK?

Figure 15. Trim attempt No. 2. The vang not adjusted; the leech of the mainsail becomes too taut.

In the front yes, but due to the strong curve in the mast we have ugly diagonal wrinkles in the mainsail from about halfway up the mast to the end of the main boom. It doesn't look like a useful mainsail profile anymore?

It does not help to try to tighten the main luff, the result may be additional wrinkles parallel to the mast.

Trim attempt No. 2

Back to the beginning: loosen the backstay and tighten the forestay. The mast is pulled forward and gets a bend in the direction opposite to what it had before, as it is fixed at the bottom with the mast plate. Of course you can create a certain tension on the forestay using the stiffness of the mast.

Result: The mainsail no longer has the ugly diagonal wrinkles but one or two parallel to the mast, as the luff is pretty tight, so that is not what we want.

Trim attempt No. 3

Therefore we just tighten our backstay again to get the mast straight or bent back again.

And the result? Now we have everything that is bad and ugly combined: The mast has an S-shaped bend at the bottom, the mainsail has parallel wrinkles, and in the top area diagonal ones again, but at least the headsail is really super-tight (and probably already too much to be good!).

Solution

Well, we need a healthy compromise and can only do so by try and error—experimenting. Unfortunately the compromise will be different for each wind condition.

First I would like to emphasize, more than anything else, a feeling for the right or better appropriate tension of the rig is needed. You won't have that feeling immediately but need to work on it and develop your skill. Personally, I prefer a slightly tense rig, as opposed to working with forces that are too strong. (However I sometimes forget that too, unfortunately…)

To escape this dilemma there is more than one possible way out. One of the keys is the adjustable mast plate.

Once again we adjust the rig as in Trial 1. Then we unscrew the mast plate a little and push it slightly to the rear. What happened? The mast curve decreases, as do the diagonal folds in the mainsail. If we exaggerate now and move the plate too far back, the mast gets an S-curve as in Trial 3. Now, as a further measure, we slightly reduce the tension on the backstay and/or tighten the forestay more or less.

We repeat this "tension ratio on backstay/forestay" and position of the mast plate until the curve of the mast fits the curve of the main luff, say until the mainsail has an even profile without wrinkles, and still tension on the forestay is kept.

Oh yes, it is not quite unimportant to remind ourselves that the general setup and angle, i.e., the basic trim/center of effort should not have moved.

It is best to try out the whole process when you have a long quiet period of time.

Usually there is no smooth mast curve that will match the curve of the mainsail luff. The lower part of the mast will be more or less straight (forced by the mast plate), and only the upper part will have a slight curve caused by the forestay and the backstay. For fine trim of that curve, you use the backstay. The mast plate is used more for the general setting. Without the mast plate, if the mast was fixed in a tube in the hull, the curve of the mast would be controllable only by adjusting forestay and backstay; you wouldn't be able to set up a basic trim.

By the way, if you use an aluminum tube (standard in the MM kit) as a mast, you can increase stiffness of the rig if you slightly pre-bend the tube. You bend the mast so that it is bent with a slight curve in the direction opposite the luff curve of your mainsail (forward bend). (Use extreme caution; it is difficult to get this right.) In order to get the proper profile for the mainsail as described above, you now need more tension on the backstay/forestay. The tension required, potentially, may need to be even higher than when using a carbon fiber mast. So the (light weight) aluminum tube might have a slight advantage.

(This method may seem to be somewhat brutal, but it is used quite commonly on the International One Metre A rigs).

More important to decide about a proper setting/bend of the mast is the target profile of the mainsail.

The Sail

Sail profile in sections

The sailmaker will cut the mainsail luff, not as a straight line, but slightly curved for two reasons: 1) to fit the curve of the bent mast and 2) for the profile/camber of the sail.

Profile? The sail should act as an airfoil and so needs a certain degree of curvature. How do you get such a 3D surface on a flat cloth? For model sails there are two ways that result in a

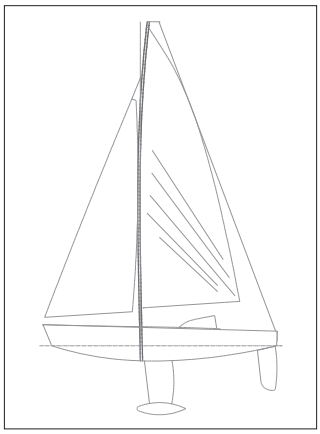

Figure 16. First Trim Attempt—Aft Bend.

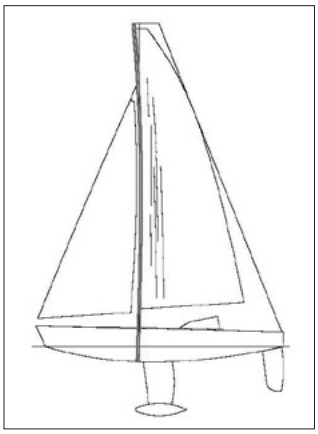

Figure 17. Second Trim Attempt—Forward Bend.

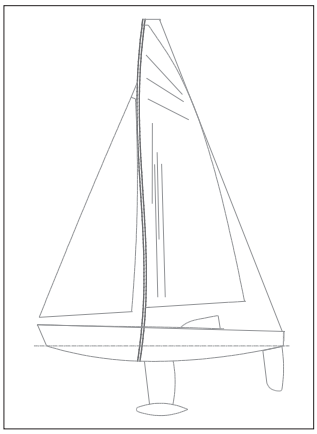

Figure 18. Third Trim Attempt—S-Bend.

Figure 19. The mainsail luff is too tight. Tip: The best way is to judge sail curve (camber) in images is to observe the shape o the draft stripes.

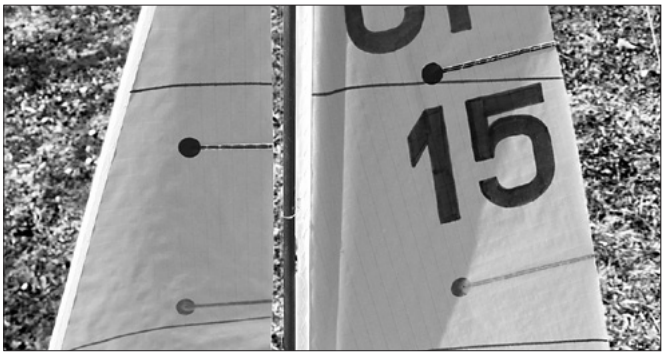

Figure 20. Again, the luff is too tight, causing an even more severe shape in the draft of the mainsail.

Figure 21. With hardly any tension on the luff of the mailsail, the point of max camber in the middle.

Figure 22. With slightly more tension on the luff of the mailsail, the point of max camber moves forward, nearer the mast.

profile: 1) a special cut on the sail luff and 2) put the sail together using several pieces, and overlap those pieces so that a profile is formed.

The MM kit provides simple sails, each cut from a single piece of cloth, and therefore only a special cut on the luff. But why *only?* The mainsail has an essential feature for a good trim, and so this is better than nothing (as in many other sailing kits). Honestly for this sail size, it is a fully sufficient means of "profiling" and does not add cost to the manufacturing.

Now the curve of the mast should be *slightly* less than the luff curve, because that little difference presses the "oversize" of the sail back into canvas and so creates so-called camber—the desired profile, as long as you do not exaggerate.

If the mast curve matches the luff curve exactly, the sail will be flat, without profile. That is not what we want, not even with much wind.

The luff should see only slight tension, just enough that creases along the mast are removed.

If you apply too much tension the mainsail, it will be distorted, and you will have creases parallel to the mast. Also, the sail will no longer easily rotate around the mast, and on a downwind course it is likely the front part will just stay as is, reducing the projected area of sail and giving it an S-shaped profile—not to our advantage.

My general tip: The luff tension in fore and main sails should be set only for sailing and loosened if not used; otherwise, the sail may suffer and be distorted permanently.

Profile of the sail at the boom

The sails are not fixed to the boom, unlike the usual setup on many of the large yachts, but the foot of the sail is loose. This allows us to adjust profile and camber.

In principle the sails are **never** pulled flat or straight along the boom, but always have a little profile left. The combination of camber along the boom and luff curve creates the sail profile we need.

According to the wind, this lower profile is set on the boom by adjusting the outhaul. For this reason the clew of the sail should not be fixed or knotted to the boom end.

Setting of the profile

The profile itself is another chapter. In principle it should be is an equal curvature over the width of the sail. The maximum draft should be in the front area at approximately at 25–50% of the chord. A full, deep profile will get you a lot of propulsion, but less close reach, which is bad when tacking. A shallow profile on the other hand provides less propulsion but will have better airflow and will give closer reach.

Figure 23. The foot of the mainsail is too tight.

Figure 24. The foot of the mainsail is too loose (luff is too loose).

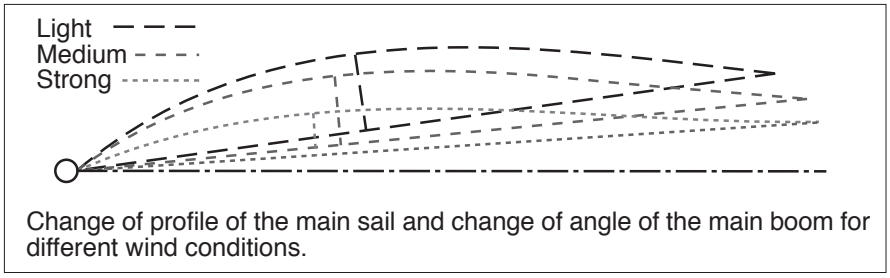

Figure 25. First Sail Profile. Note the change in the amount of draft and the shift of the point of max camber in the sail. Keep in mind that this is a generalization, and that there are exceptions, such as using the "light" setting for strong wind in rough water.

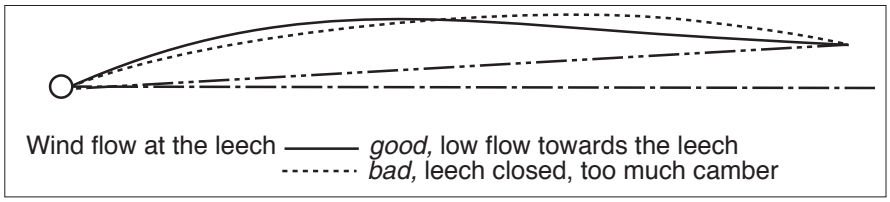

Figure 26. Second Sail Profile. An important aspect of sail shape is the leech not cutting into the airflow, so the wind can run smoothly off the sail.

Some basics depending on the wind speed:

1. In little wind, the center of the profile (depth and position) should be toward the middle of the sail, approximately 40%, as shown for light wind (long dashed line).

2. On the other hand for more wind, the profile of the sail should be shallower, and the maximum draft should be more to the front, as shown for strong wind (short dashed line).

As usual there are exceptions:

In very little wind, a deep profiled sail will not tack and take shape on the new tack because the sail has become quite stiff. So the optimum profile won't work, and on such doldrums days you set less camber. It may slow you down on most courses to windward, but most likely will make you move.

However, in strong wind there are situations when a bulbous sail is to your advantage. In rough sea your boat will need all the power it can get to plough through the waves. You should set a deeper camber for more pull, even with the slight disadvantage that you won't sail as close to the wind anymore. Prefer less close-hauled and more pull than more close-hauled and less momentum.

Figure 27. The main leech is too loose.

Figure 28. The main leech is too tight.

Similar is to be said for low wind conditions where you should try to keep the boat moving and not try to sail so close-hauled, and starve your boat.

Another error is to tighten the vang and apply too much tension to the leech. This is to be said for all wind speeds!

Any sail must have a certain amount of twist and needs to twist more towards the top.

The curve should not be even over the entire leech as is the case on wings of simple airplanes. The general assumption that such a wing curve can be simply transferred to a sailboat sail was proven wrong in many tests.

An important aspect of sail shape is the leech not cutting into the airflow, so the wind can run smoothly off the sail. Viewing the leech from top, it should be more or less parallel to the boom than pointing to windward. This is especially true for the bottom of the sail, when the mainsail, for example, is distorted by a vang set too tight. With such a closed leech the sail will create less propulsion and more heel.

Therefore please don't overtighten, not even under strong wind. You may want to set it tighter than needed while you are at the beach to compensate for the wind offshore.

The tension of the leech is set on the mainsail using the vang, on the jib it is the combination of tension on forestay and topping lift.

For low wind conditions the sails should be set to minimum tension so that they can move freely and get their preset shape easily. The mainsail should be able to turn as easy as possible around the mast—a shallow camber—more mast curve helps. (This takes us back to the topping lift again, for more mast curve—more tension on forestay and backstay—more tension on the jib boom—without topping lift the mainsail leech will be too tight)

In general with low winds you should keep your rig tension low as well.

For normal wind you need a rig setting that eliminates rig flexibility as much as possible, so that the trim of your sails, profile and camber, stays as set. Try to keep the tension in the system: mast/mast plate/forestay/backstay.

Under high wind and in heavy gusts it useful if the sails and rig can yield to overload. So don't create more tension in super-tightening everything, but keep the tension from your regular trim, and set the profile of the sails to match the water (shallow profile—low waves; deep profile—high waves).

If your sails are too large for the wind, they should be able to flap in upper parts. It doesn't look good and isn't really good for proplusion and leeway but is the only way to take load off the boat. A superb profile won't help if your boat is flat on the water. Ideally, you swap to a smaller rig.

Bottom line

Unfortunately no one can give exact and proper values on how to set up a boat. When the boat is in the water under wind, the built-in flexibility of material and the complete rig will change any setting done while on the shore—more or less.

There is a reason for the saying that a new boat starts performing properly in its second year. During the first season you are not familiar enough with it and the settings it needs.

I hope I was able to show you some of the connections and relationships—let's keep trying.

Figure 29. The mailsail must have a certain amount of twist and needs to twist more toward the top. A vang setting that is too tight will distort this. This side view of a downwind, wing-on-wing, sailset illustrates that certain amount of twist in the leech of the mailsail.